HappyJapan

HCR3

Industrial multi-head embroidery machine

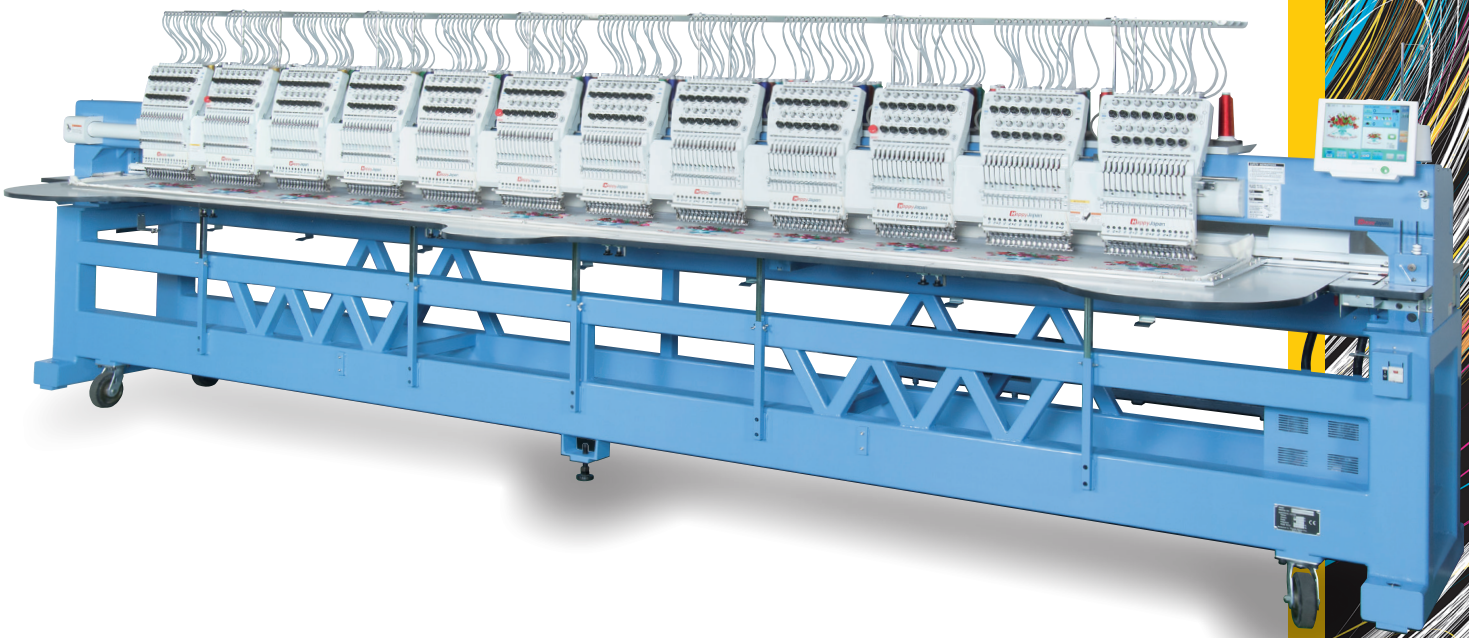

MODEL:HCR3-1512-45
10.4"Control Panel (Option)

OPTIONS

Easy and Smart

Touch Panel
999 patterns memory
40,000,000 stitches memory

USB and Mouse

LAN and USB connection

Editing function in HAPPY LAN/LINK software

HAPPY BELL
Mobile Device Application
for machine status notification

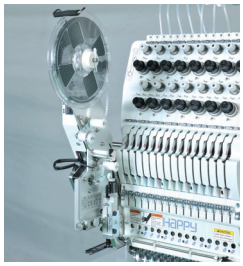

Sequin Device

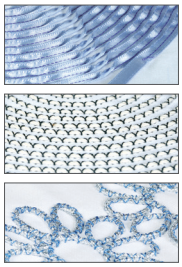

Zigzag Cording Device

Borer Device

HCR3 Series Specifications

Model	Head	Needles	Needle Distance	Embroidery Area per Head (D×W)				Maximum Speed (RPM)	
				Normal	Tubular Frame	Wide Cap Frame	Low-profile Cap frame	Normal Tubular	Cap
HCR3-1502	2	15	500mm 19.7inch	450×500mm 17.7×19.7inch	420 ×440mm 16.5×17.3inch	80×360mm 3.1×14.2inch	70 ×180mm 2.8×7.1inch	1200	1100
HCR3-1504	4		360mm 14.2inch	450×360mm 17.7×14.2inch	320 ×320mm 12.6×12.6inch			1100	1000
HCR3-X1504	4		500mm 19.7inch	450×500mm 17.7×19.7inch	420 ×440mm 16.5×17.3inch				
HCR3-1506	6		360mm 14.2inch	450×360mm 17.7×14.2inch	320 ×320mm 12.6×12.6inch				
HCR3-X1506	6		500mm 19.7inch	450×500mm 17.7×19.7inch	420 ×440mm 16.5×17.3inch				
HCR3-1508	8		360mm 14.2inch	450×360mm 17.7×14.2inch	320 ×320mm 12.6×12.6inch				
HCR3-X1508	8		500mm 19.7inch	450×500mm 17.7×19.7inch	420 ×440mm 16.5×17.3inch			1000	850
HCR3-1512	12		360mm 14.2inch	450×360mm 17.7×14.2inch	320 ×320mm 12.6×12.6inch				

Model	Stitch Length	Memory	Power Supply	Power Consumption Max	Frequency	Weight	Dimensions				
							L	D1	D2	H1	H2
HCR3-1502	0.1-12.7mm 0.004-0.5inch	40,000,000 stitches 999 oatterns	Single Phase 200-240V	320W	50/60Hz	480kg	1980mm	830mm	1320mm	1510mm	1740mm
HCR3-1504				340W		560kg	2280mm				
HCR3-X1504						800kg	3000mm				
HCR3-1506				410W		840kg	3000mm				
HCR3-X1506						1030kg	3980mm				
HCR3-1508				540W		1070kg	3980mm				
HCR3-X1508				650W		1470kg	5420mm				
HCR3-1512						1470kg	5420mm				

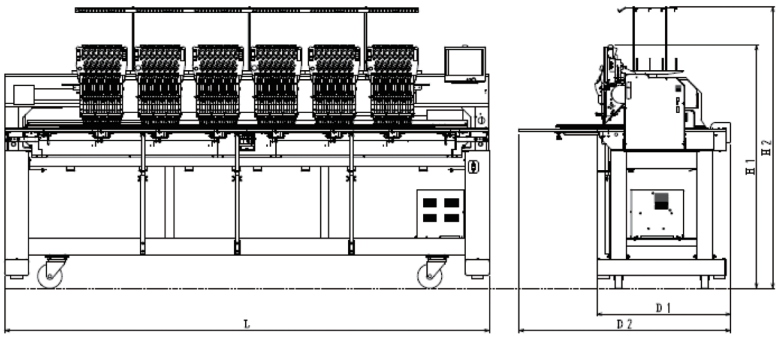

＊ Note1: For more information about other options, please contact your local distributor(s) in your country ＊ Note2: HCR3e series with lower prices are available.

Manufactured by:

HappyJapan

HappyJapan Inc.

TOKYO OFFICE: 2-9-5 Taito, Taito-ku, Tokyo, Japan
phone: +81-3-3834-0718 fax: +81-3-3835-8917
E-mail: emb-info@happyjpn.com
http://www.happyjpn.com

Distributed by:

บริษัท กู๊ดเวิร์ค อินเตอร์เทรด จำกัด
GoodWork Intertrade Co.,Ltd.
37,39 ซอยเพชรเกษม 48 แยก 20 แขวงบางด้วน
เขตภาษีเจริญ กรุงเทพมหานครฯ 10160
TEL : 089-669-6988 (สายด่วน)
TEL : 02-4575721-22 ต่อ 105,106 (ฝ่ายขาย)
Website : www.goodwork.co.th

2017.01